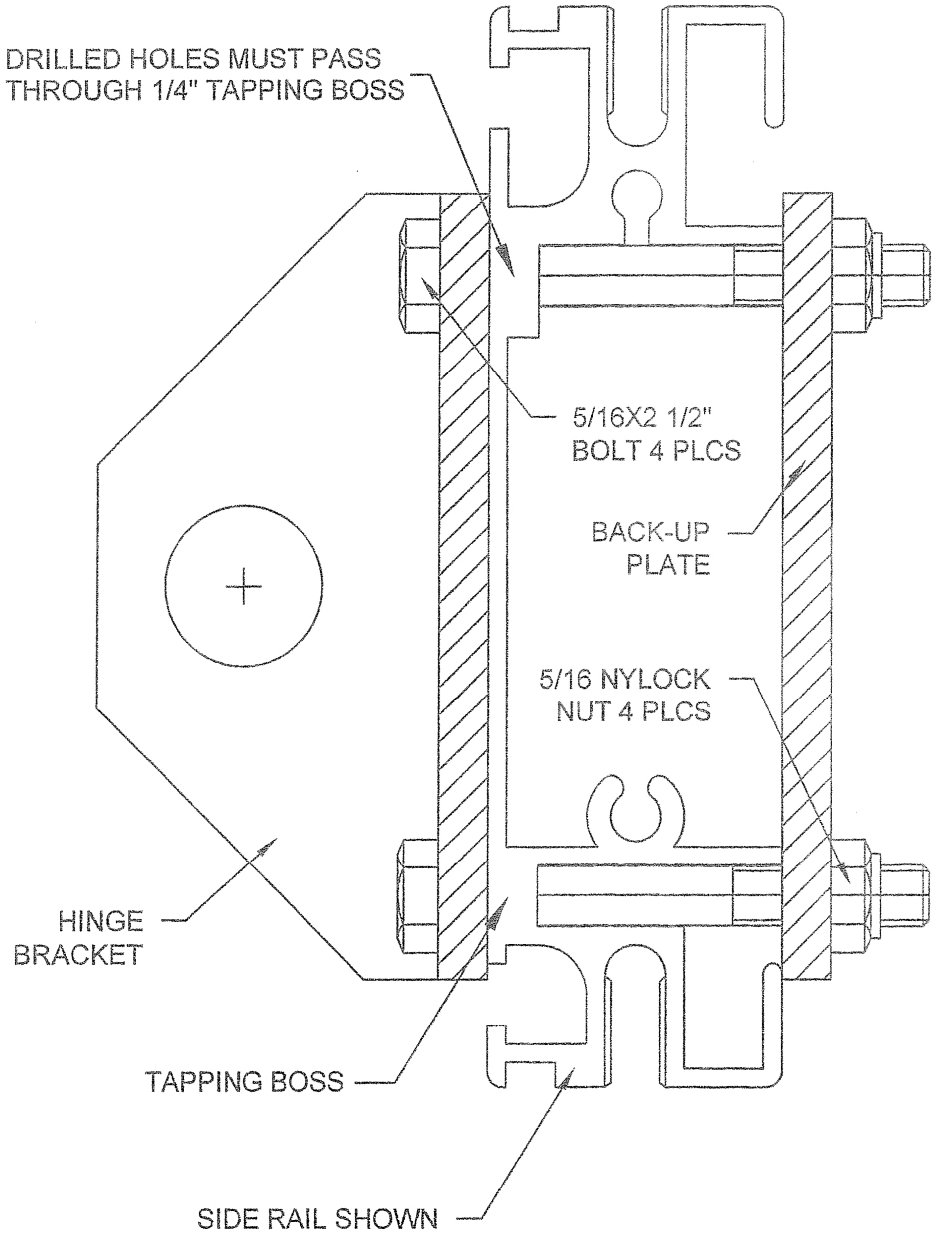

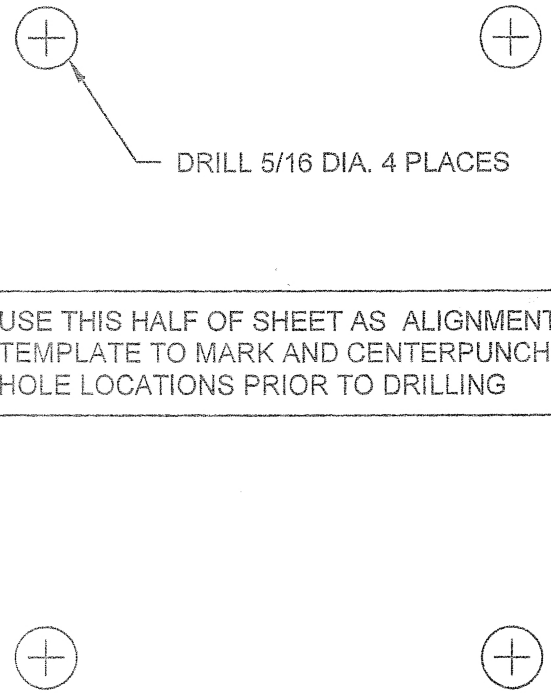

USE THIS HALF OF SHEET AS ALIGNMENT TEMPLATE TO MARK AND CENTERPUNCH HOLE LOCATIONS PRIOR TO DRILLING

NOTE: HOLE PATTERN ON END RAILS IS INVERTED RELATIVE TO SIDE RAILS

HINGE RELOCATION KIT INSTALLATION

INFO PN02068